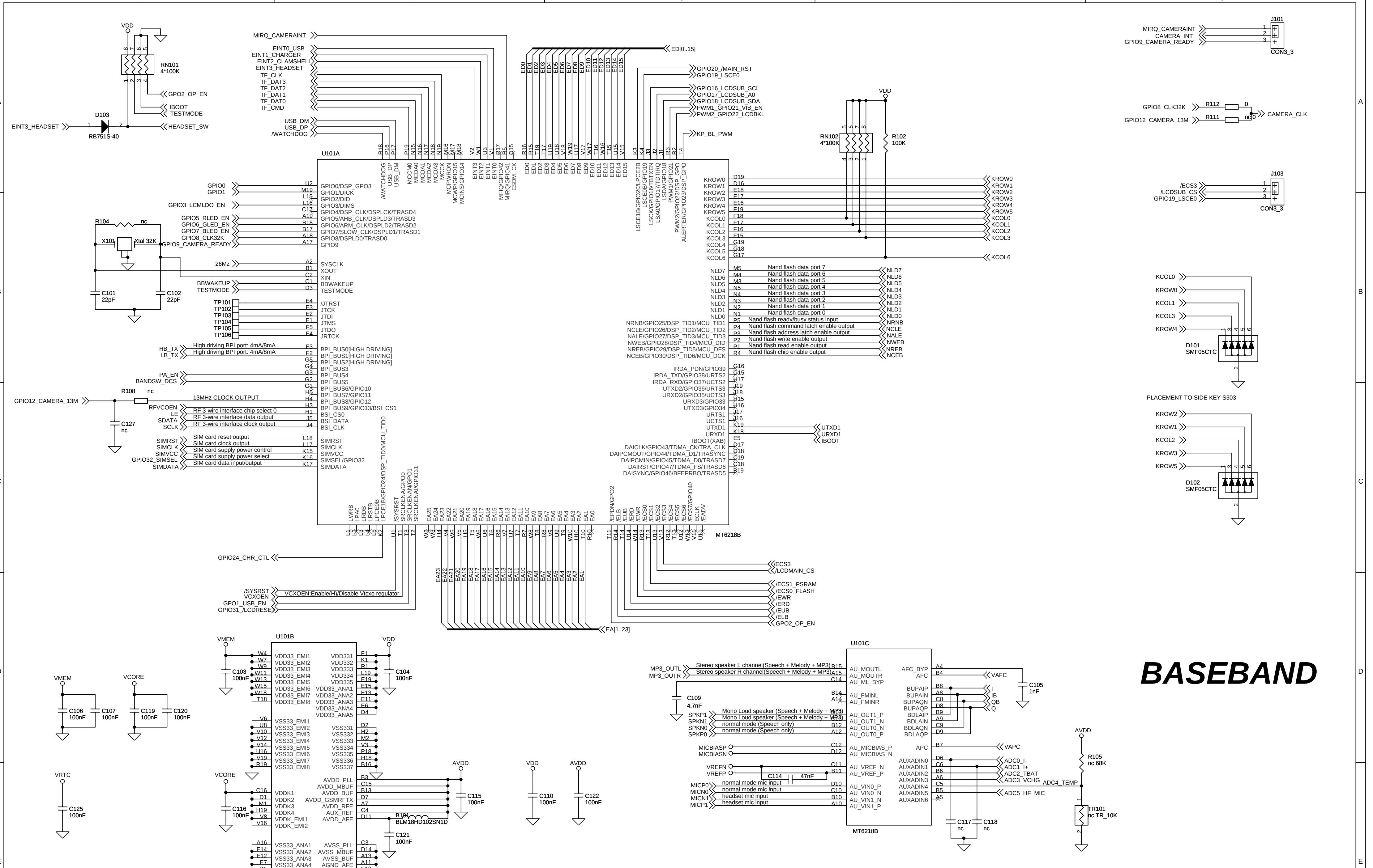

Revision					THIS DOCUMENT CONTAINS PROPRIETARY INFORMATION AND SHALL NOT DUPLICATED OR DISCLOSED TO OTHERS WITHOUT THE PRIOR WRITTEN PERMISSION OF Simcom	Simcom (Shanghai) CO.,LTD.
ECO_No.	Rev.	Description	Author/Date	Approval/Date	Drawn: LiGuoyu; Date: 05-03-18	Title: M2188
					Checked; Date:	Size: A3; Document Number: 1 MT6218B; Rev: 1.03
					Approval; Date:	Design: LiGuoyu; Date: 05-03-18; Sheet 1 of 5

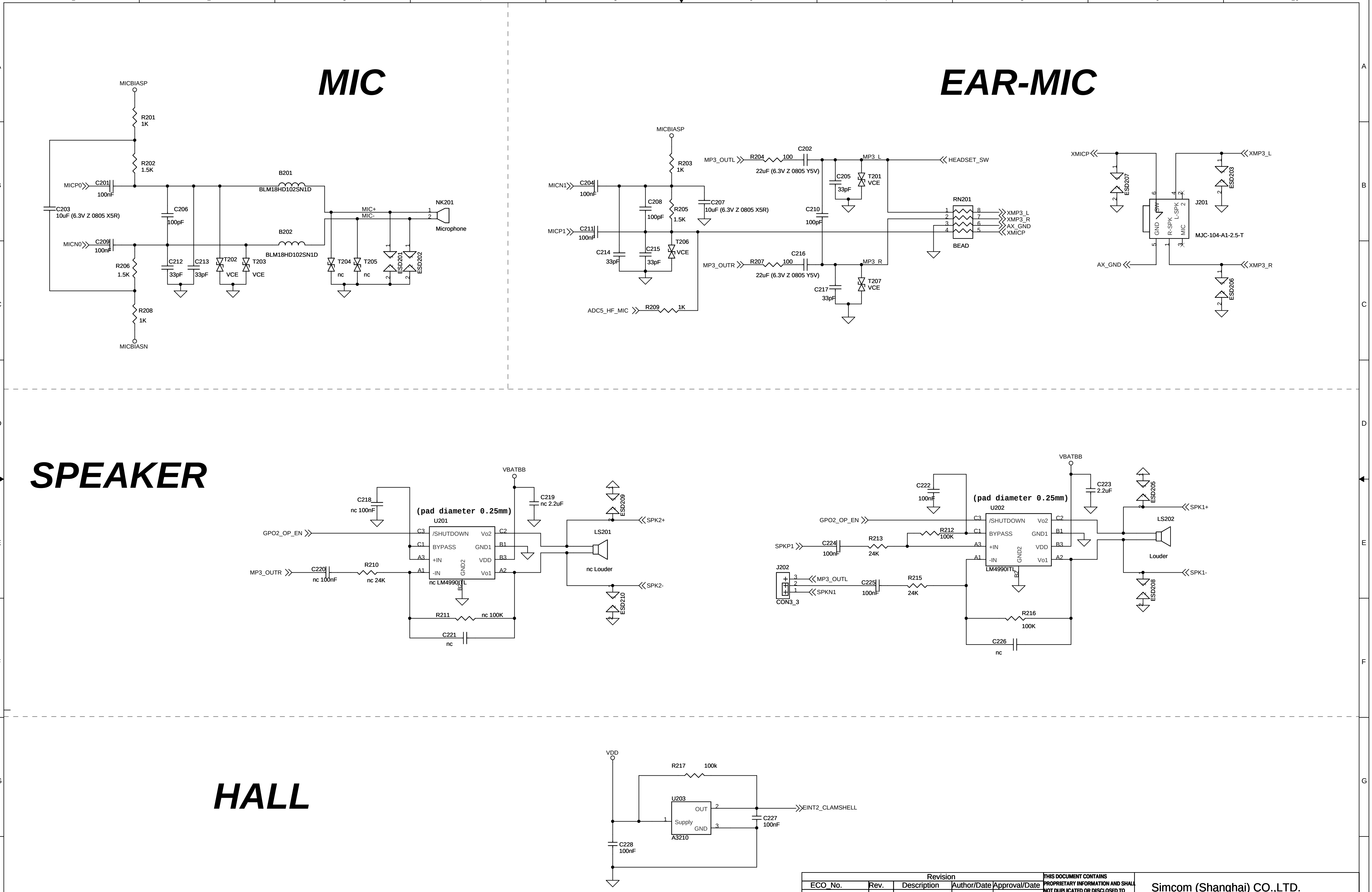

Revision					THIS DOCUMENT CONTAINS PROPRIETARY INFORMATION AND SHALL NOT DUPLICATED OR DISCLOSED TO OTHERS WITHOUT THE PRIOR WRITTEN PERMISSION OF Simcom	Simcom (Shanghai) CO.,LTD.
ECO_No.	Rev.	Description	Author/Date	Approval/Date		
						Title: M2188
					Drawn: LiGuoyu / Date: 05-03-18	
					Checked / Date:	Size: A3 / Document Number: 2 Audio,Hall IC / Rev: 1.03
					Approval / Date:	
						Design: LiGuoyu / Date: 05-03-18 / Sheet 2 of 5

MEMORY

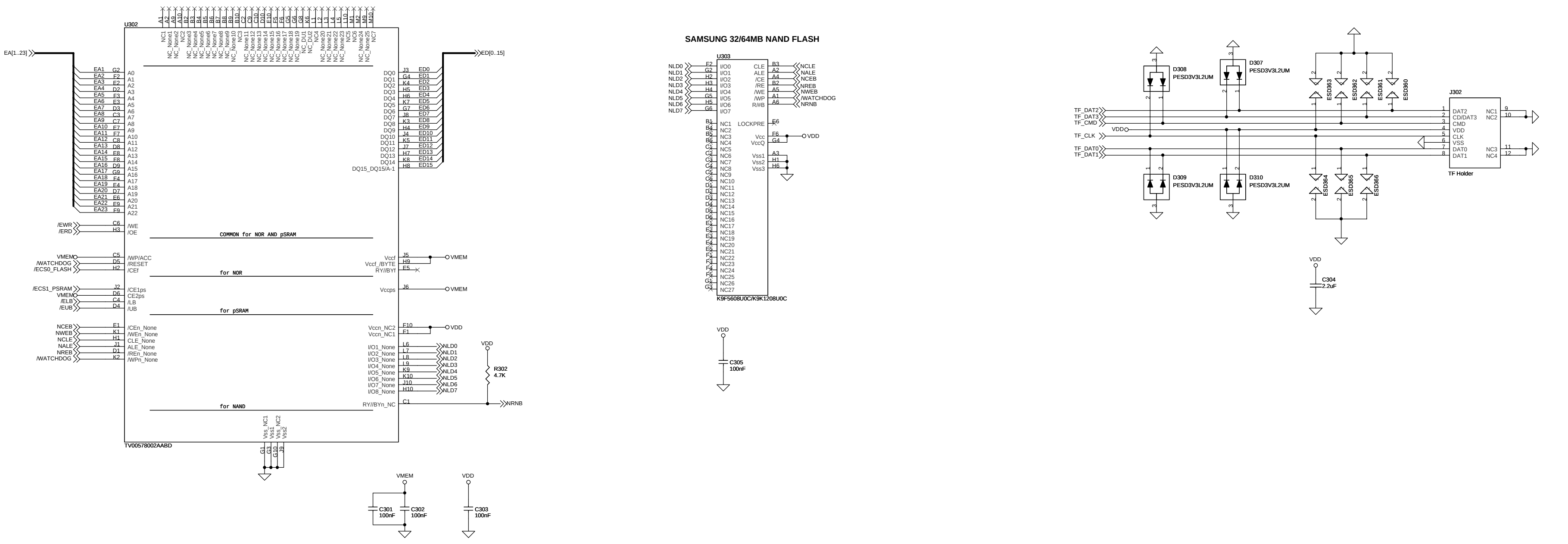

SYSTEM I/O CONNECTOR

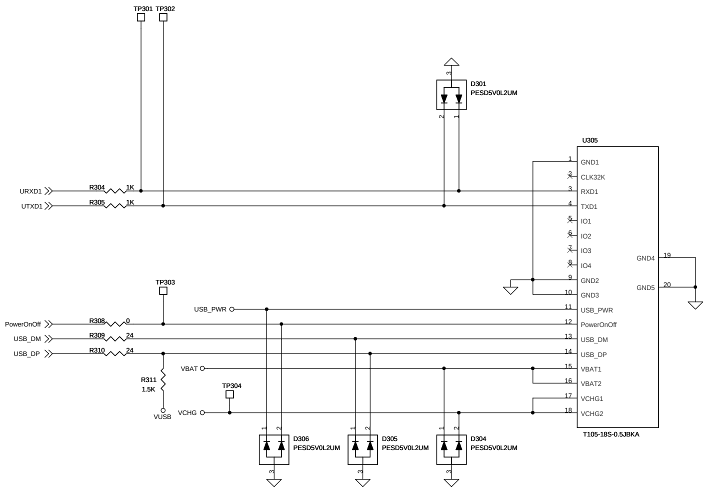

BATTARY

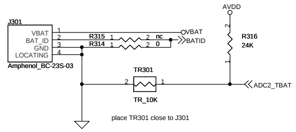

KEY

KEYPAD (TACTILE SWITCH)

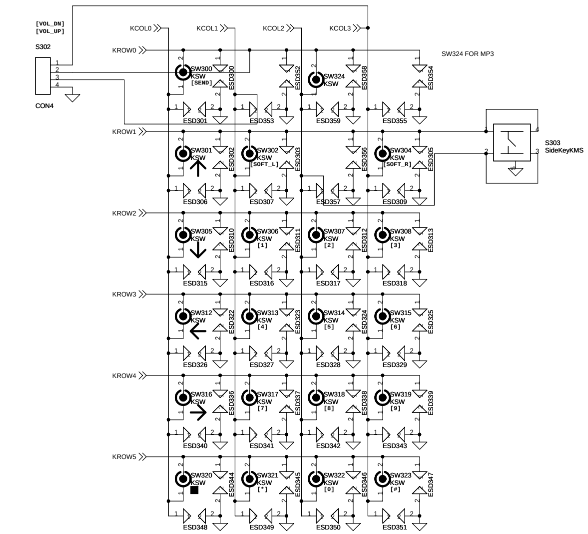

Revision					THIS DOCUMENT CONTAINS PROPRIETARY INFORMATION AND SHALL NOT DUPLICATED OR DISCLOSED TO OTHERS WITHOUT THE PRIOR WRITTEN PERMISSION OF Simcom	Simcom (Shanghai) CO.,LTD.
ECO_No.	Rev.	Description	Author/Date	Approval/Date	Drawn LiGuoyu Date: 05-03-18	Title M2188
					Checked Date:	Size A2 Document Number 3 Memory,Key,IO Rev 1.03
					Approval Date:	Design: LiGuoyu Date: 05-03-18 Sheet 3 of 5

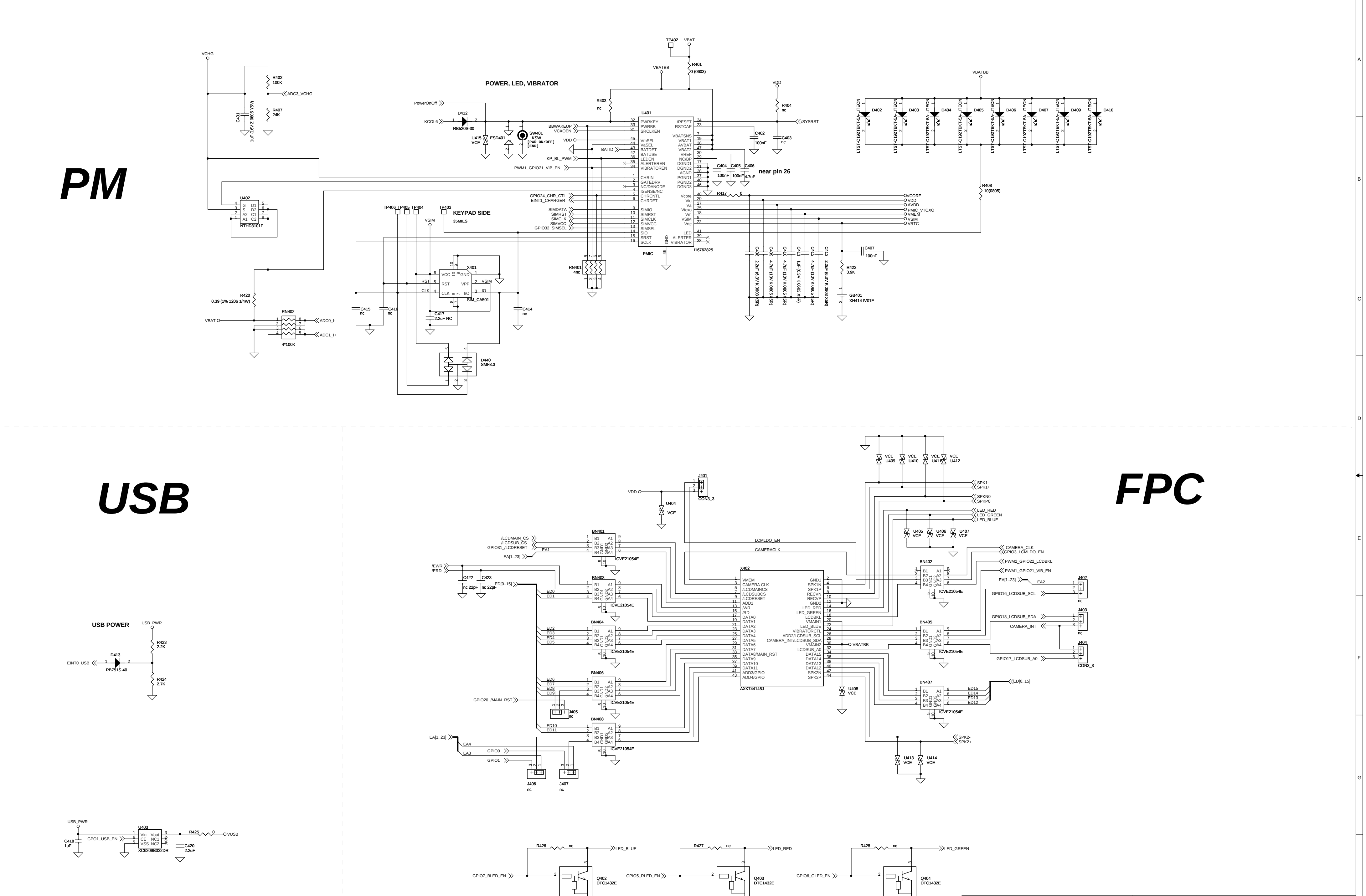

Revision				
ECO_No.	Rev.	Description	Author/Date	Approval/Date

THIS DOCUMENT CONTAINS PROPRIETARY INFORMATION AND SHALL NOT DUPLICATED OR DISCLOSED TO OTHERS WITHOUT THE PRIOR WRITTEN PERMISSION OF Simcom.

Simcom (Shanghai) CO.,LTD.

Drawn: LiGuoyu	Date: 05-03-18	Title	M2188	
Checked	Date:	Size: A2	Document Number: 4 Power,USB,FPC	Rev: 1.03
Approval	Date:	Design: LiGuoyu	Date: 05-03-18	Sheet 4 of 5

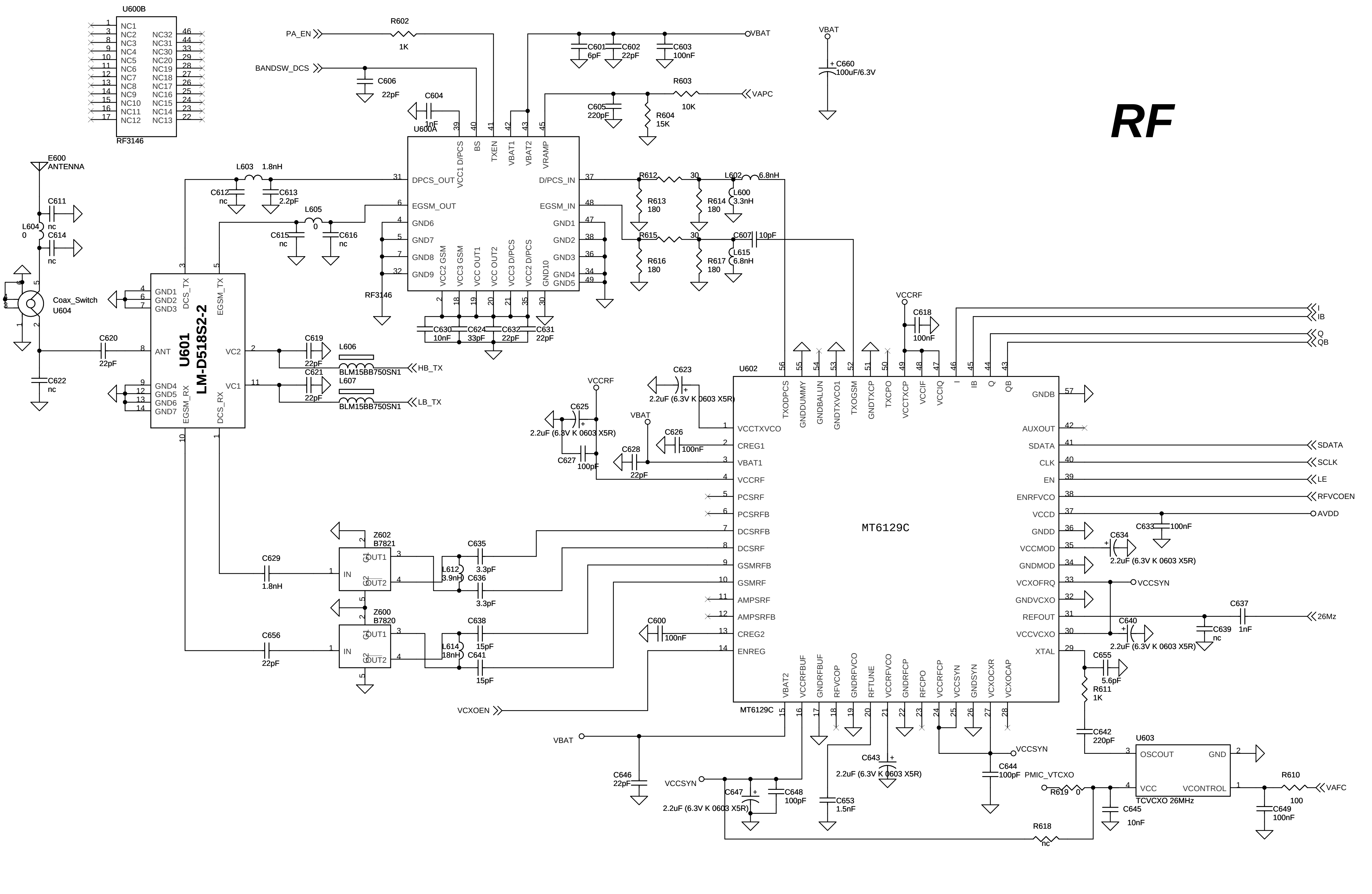

Revision				
ECO_No.	Rev.	Description	Author/Date	Approval/Date

THIS DOCUMENT CONTAINS PROPRIETARY INFORMATION AND SHALL NOT DUPLICATED OR DISCLOSED TO OTHERS WITHOUT THE PRIOR WRITTEN PERMISSION OF Simcom

Simcom (Shanghai) CO.,LTD.

Drawn: ZhangYan	Date: 05-03-18	Title	M2188
Checked	Date:	Size A3	Document Number 5 MT6129C — Rev 1.03
Approval	Date:	Design: ZhangYan	Date: 05-03-18 Sheet 5 of 5